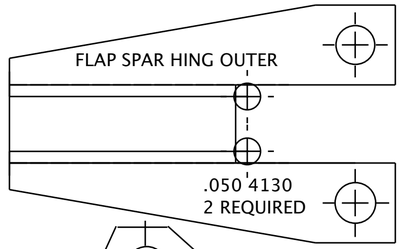

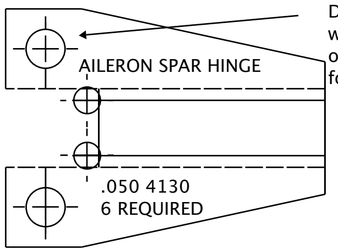

Drill for bushing to be welded. remove center of bushing after welding for alignment.

HNGE PATERNS ARE TAKEN FROM METAL AILERON AND FLAP DRAWINGS. HINGES BOLTED TO WOOD SPAR WITH AN3 BOLTS.

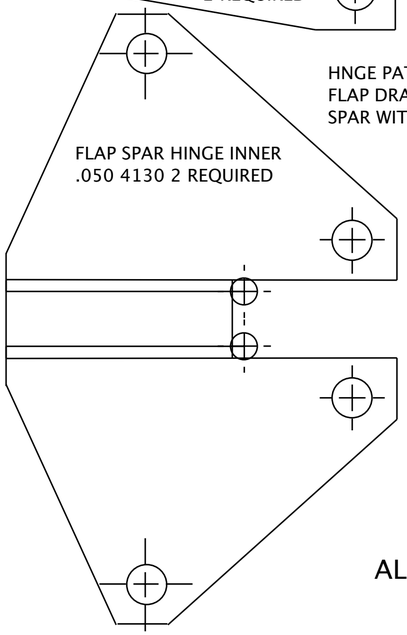

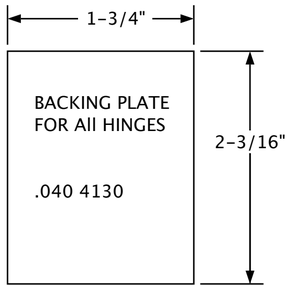

ALL PATTERNS THIS PAGE FULL SIZE

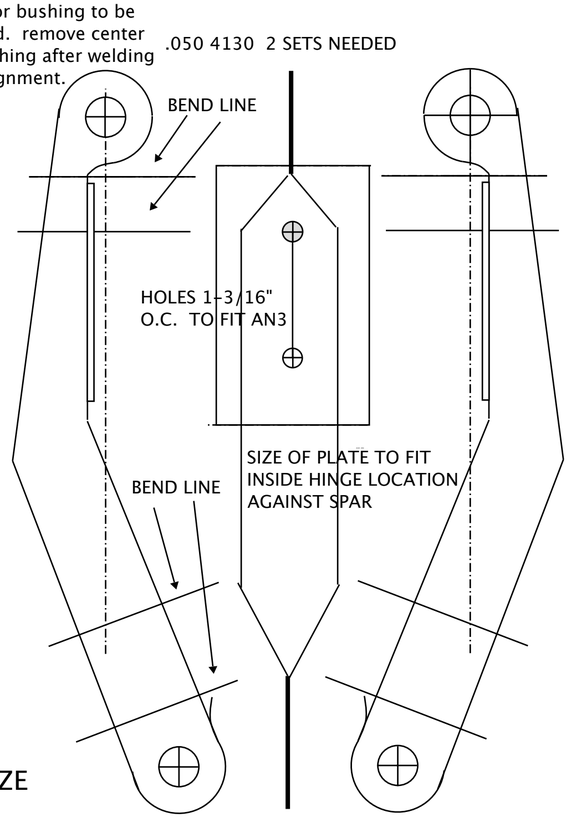

3/8 x .065 4130
REAMED FOR 1/4"
CLEVIS PIN